REVISIONS				
ZONE	REV.	DESCRIPTION	DATE	APPROVED

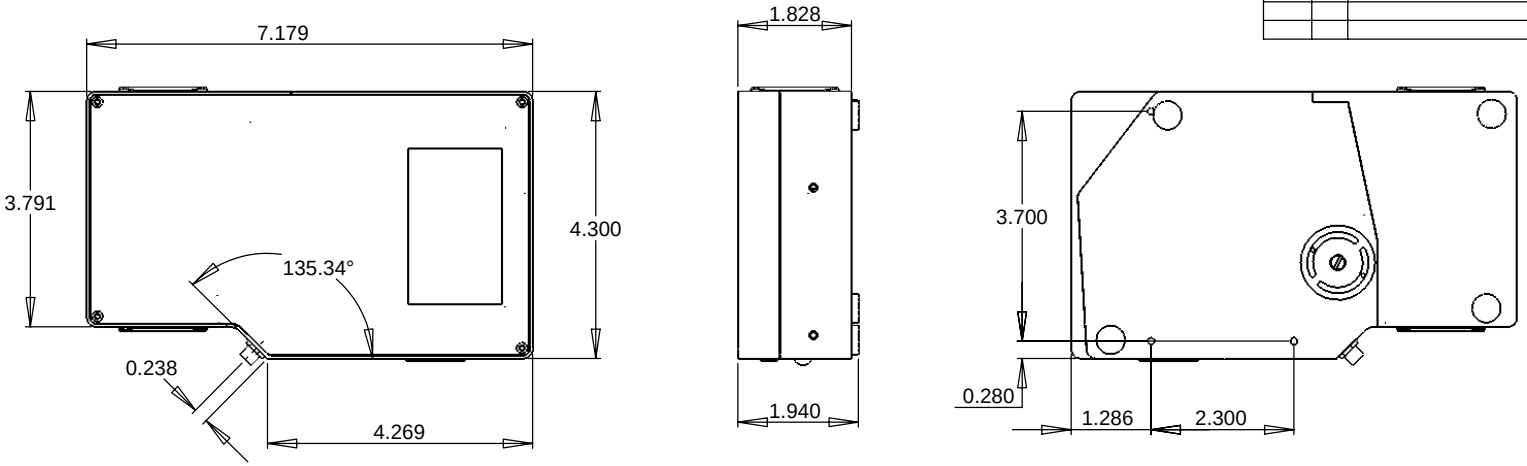

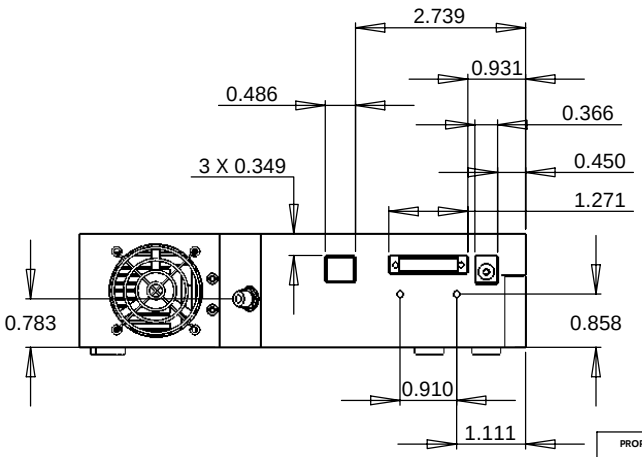

NOTES: (UNLESS OTHERWISE SPECIFIED)
1. ALL MOUTING HOLES ARE 4-40UNC-2B THREAD.

PROPRIETARY AND CONFIDENTIAL

THE INFORMATION CONTAINED IN THIS DRAWING IS THE SOLE PROPERTY OF OCEAN OPTICS, INC. ANY REPRODUCTION IN PART OR AS A WHOLE WITHOUT THE WRITTEN PERMISSION OF OCEAN OPTICS, INC. IS PROHIBITED.

830 Douglas Ave.
Dunedin, FL 34698

OCEAN OPTICS, INC

(727) 733-2447
(727) 733-3962 FAX

			DATE	NAME
		DRAWN	2/4/05	MB
		CHECKED		
		ENG APPR.		
		MFG APPR.		
		Q.A.		

UNLESS OTHERWISE SPECIFIED:
DIMENSIONS ARE IN INCHES
TOLERANCES:
FRACTIONAL ± 1/64
ANGULAR: ± 0.5°
TWO PLACE DECIMAL ± 0.010
THREE PLACE DECIMAL ± 0.005

INTERPRET GEOMETRIC TOLERANCING PER: ANSI Y14.5

MATERIAL

FINISH

DO NOT SCALE TO DRAWING

COMMENTS:

NEXT ASSY | USED ON

APPLICATION

TITLE:

QE65000 SPECTROMETER

FILENAME: 220-00000-000-CC.SLDDRW

SIZE	DWG. NO.	REV
B	220-00000-000-CC	

SCALE: 1:5 | WEIGHT: | SHEET 1 OF 1